THIS DRAWING MY NOT BE USED FOR ANY PURPOSE OTHER THAN BY THE OWNER. THE DRAWING & DESIGN ARE PROPERTY OF ROTONICS MANUFACTURING, INC. ALL DIMENSIONS SHOWN ARE OUSIDE PART DIMENSIONS IN INCHES, AND MAY VARY DUE TO MATERIAL SHRINKAGE. SPECIFICTIONS ARE SUBJECT TO CHANGE WITHOUT NOTICE. GALLONS AND WEIGHTS ARE APPROXIMATE ONLY.

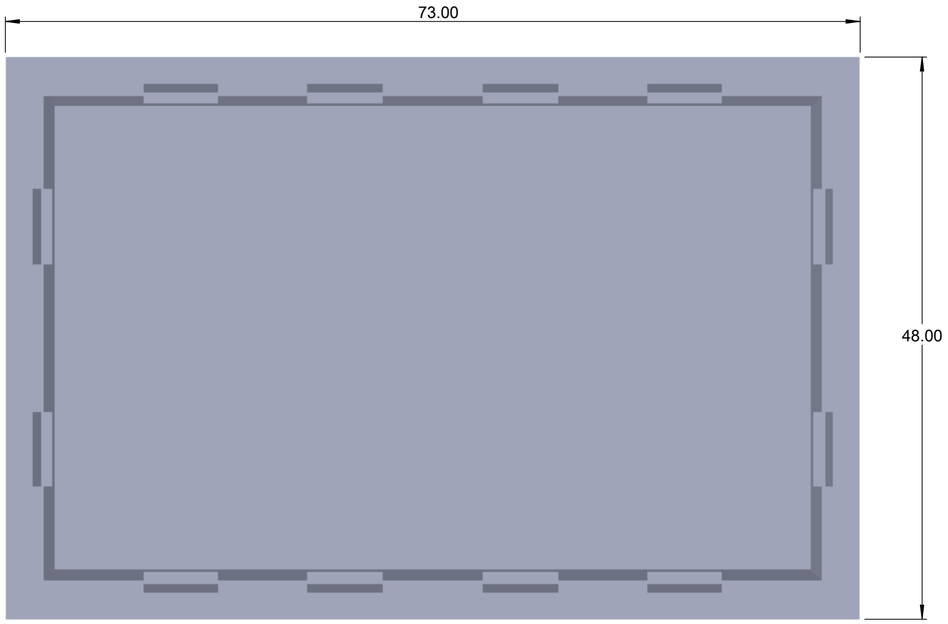


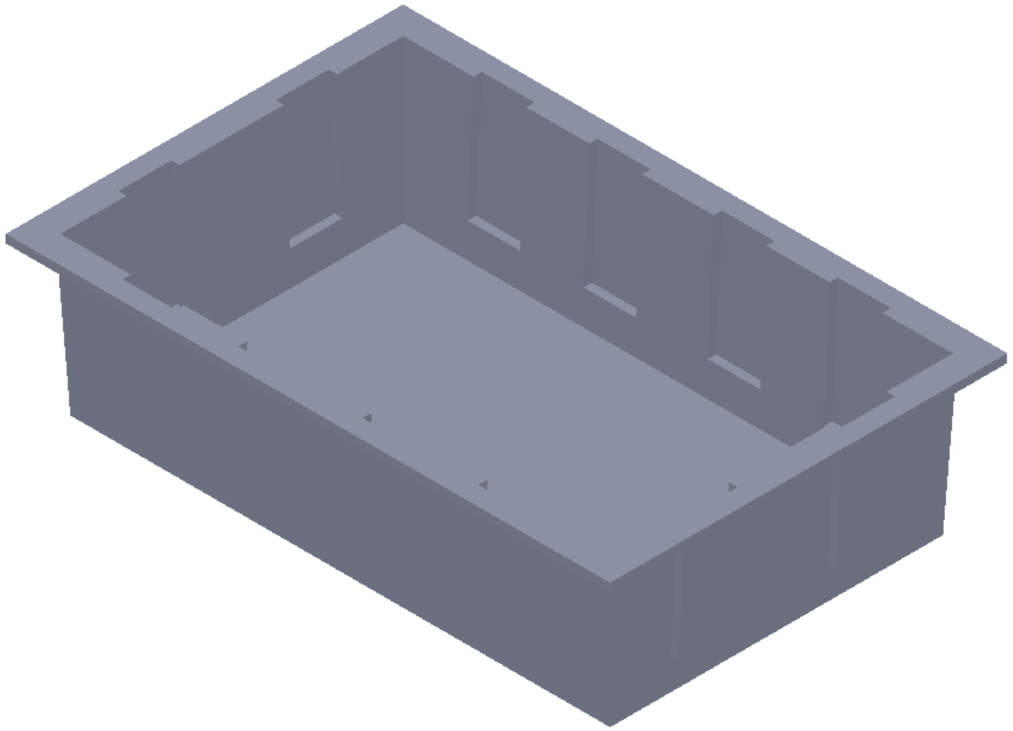

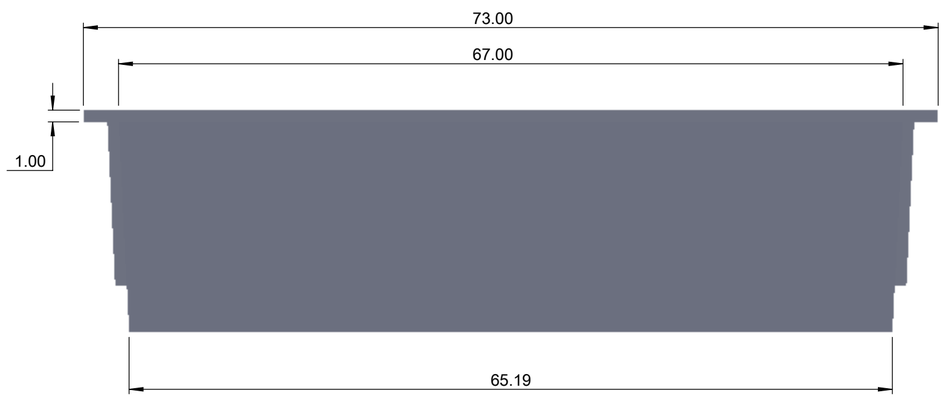


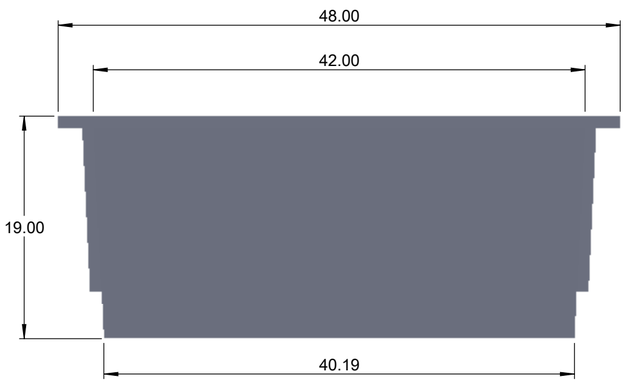


| | | | |
|---|---|---|---|
| ROTONICS MFG, INC.<br>www.rotonics.com | | RMI-G<br>17038 S. Figueroa St.<br>Gardena, CA 90248<br>Phone: 310-327-5401<br>Fax: 310-323-9567 | |
| TITLE: 6607 | 220 GALLON CHEMICAL CONTAINMENT BASIN 15 | | |
| DRAWN BY: S CAMPBELL | DATE: 08/22/09 | DWG. NO. 6607 | REV: A |
| | | SCALE: 1:10 | SHEET 1 OF 1 |